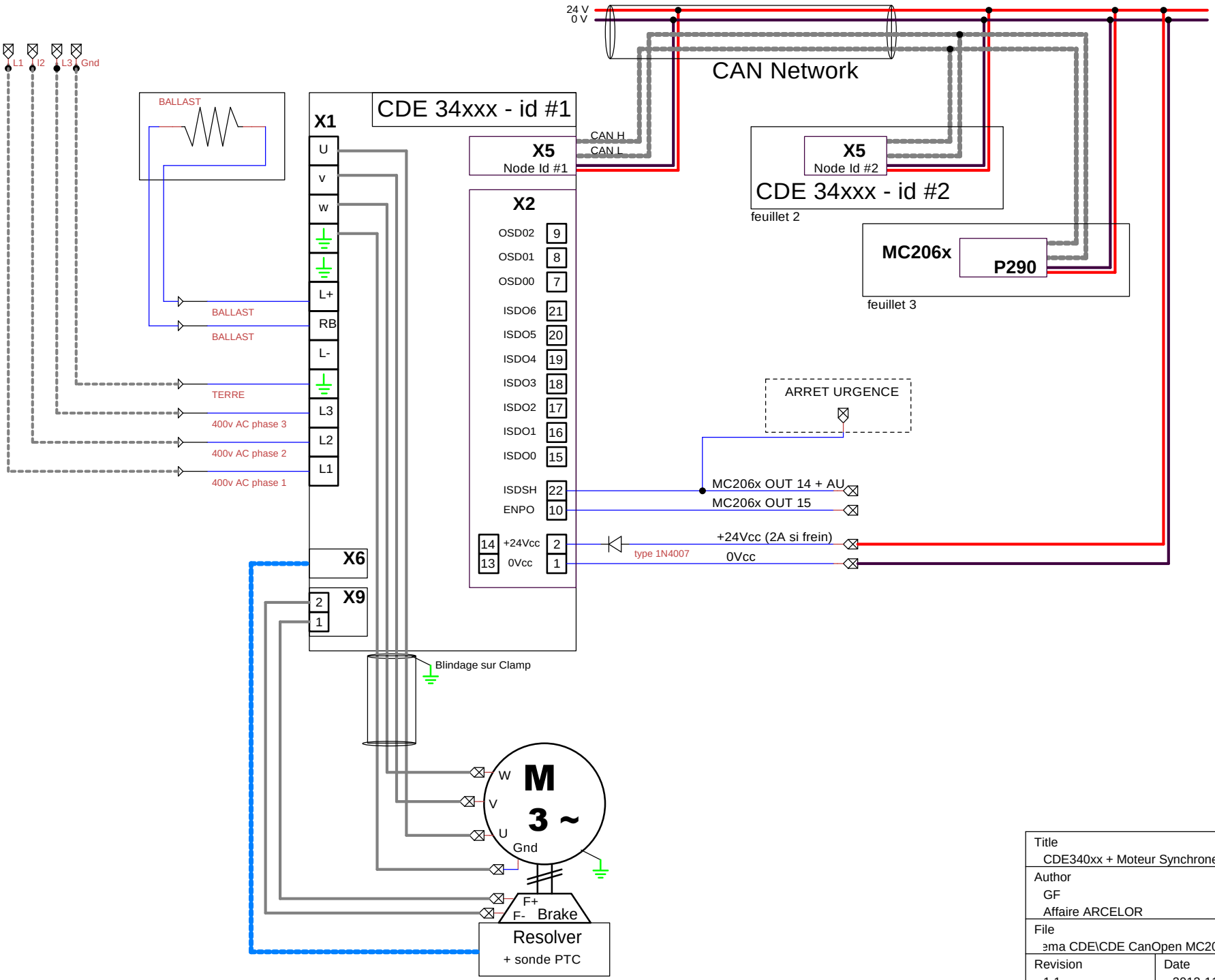

Title CDE340xx + Moteur Synchrone		
Author GF Affaire ARCELOR		
File ema CDE\CDE CanOpen MC206X sheet 1 v2.dsn		Document
Revision 1.1	Date 2012-11-21	Sheets 1 of 3